2 615 022 132
Stand ~~98-08~~
Issue 98-09-28

Fig./Abb. 1

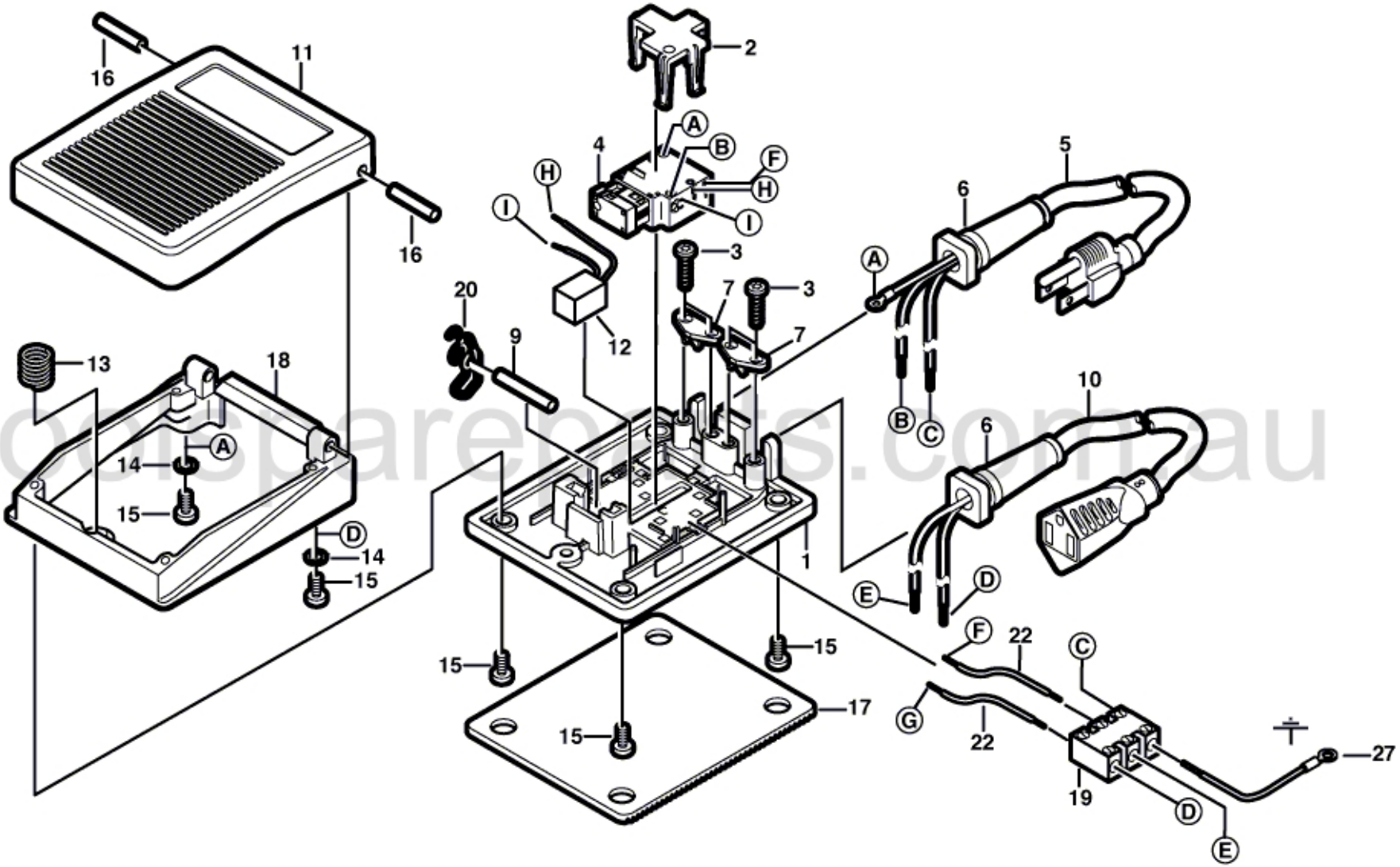

toolspareparts.com.au

Änderungen vorbehalten
Modifications reserved
Modifications reservees
Salvo modificaciones